HIGH SPEED STEAM COOKER

PRESSURE STEAMERS

HOBART UK,
SOUTHGATE WAY,
ORTON SOUTHGATE,
PETERBOROUGH.
PE2 6GN
0844 888 7777
www.hobartuk.com

Mobile Steam Cooker Stand

205GB-10

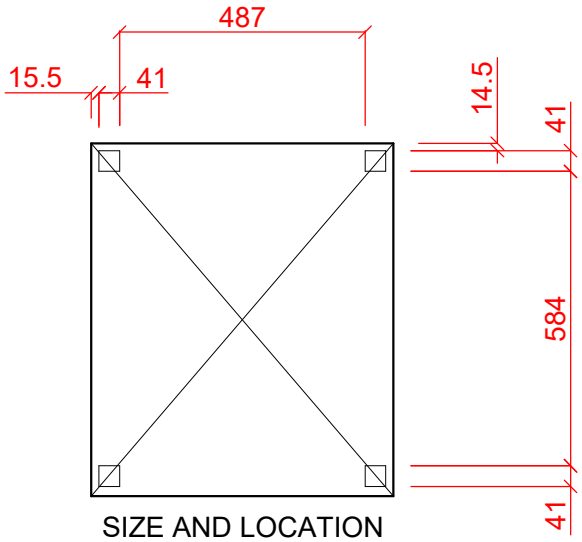

SIZE AND LOCATION
OF LEGS

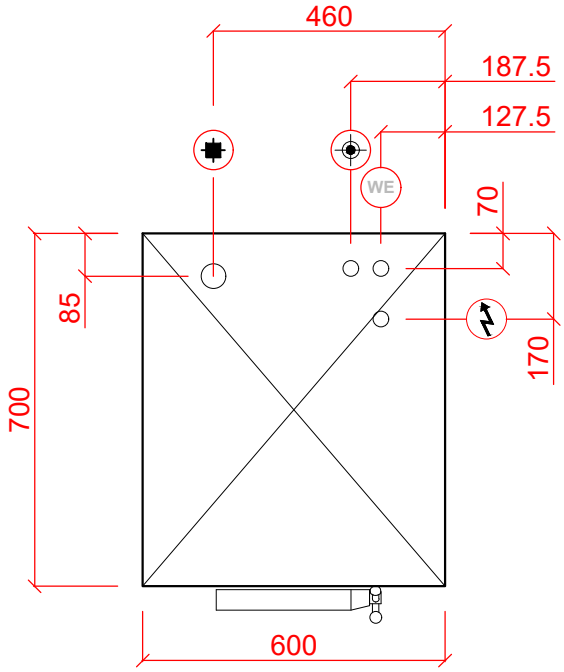

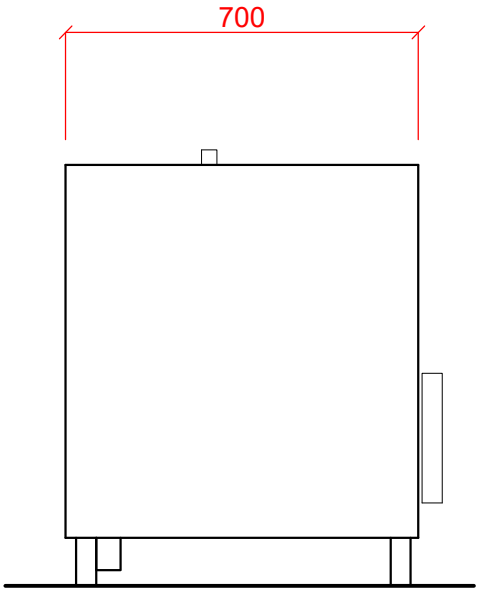

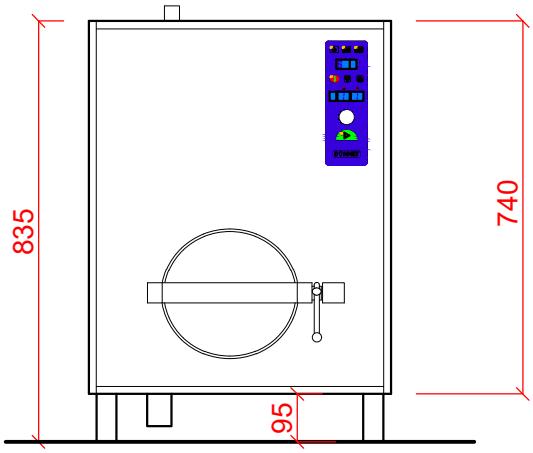

Device Number	Description	Electric	Notes
205GB-10	Pressure Steamer single chamber to suit 1 x 1/2 GN pan 100mm. deep.	400/50/3 + N + E 18.0kW (switchable to 9kW) Fuse at 28A/phase	ELECTRICAL CONNECTION WATER INLET 3/4" BSP WATER CONDENSE BOX 3/4" BSP DRAIN 1"BSP **SPECIAL NOTE:** THERMAL RADIATION - APPROXIMATELY 1.5 kW AT DOOR, BUT REMAINDER NEGLIGIBLE AS MACHINE HAS INSULATED PANELS. ALL SERVICES ENTER FROM BELOW UNIT

PLOT SCALE: 1:15 @ A4